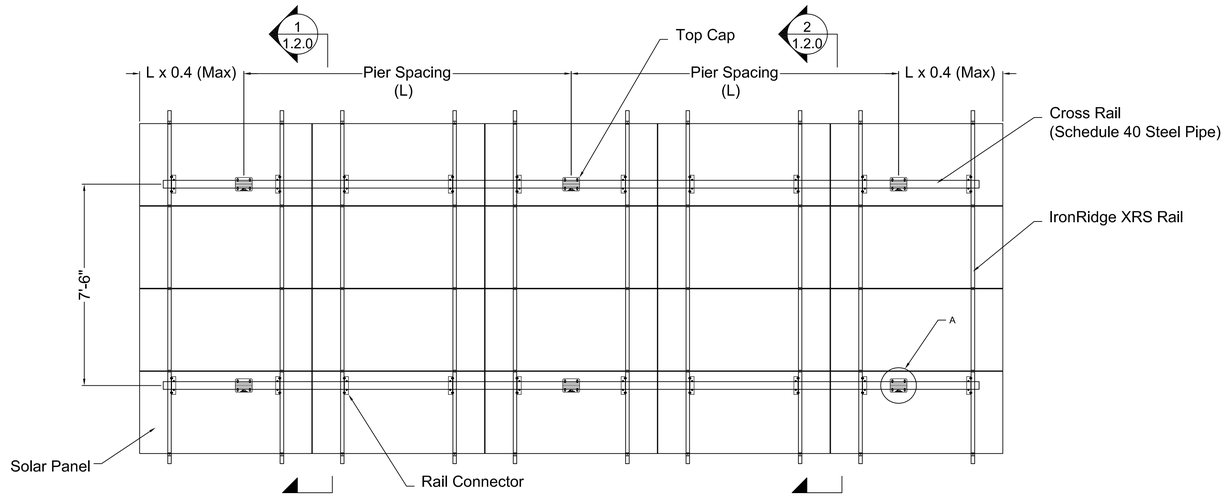

Typical Ground Array - Plan View
3/8" = 1' -0"

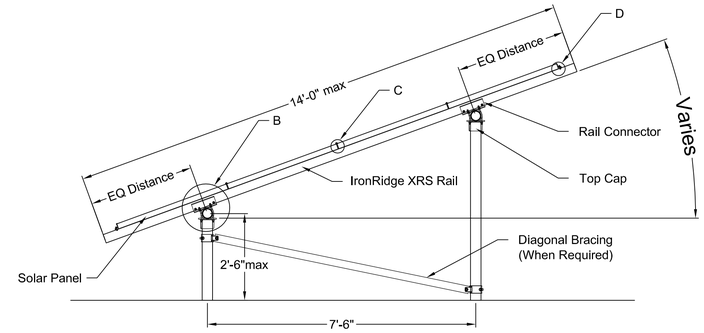

SECTION 1 / 1.2.0
1/2" = 1' -0"

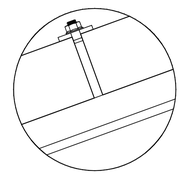

Detail C - Mid Clamp to XRS Rail
6" = 1' -0"

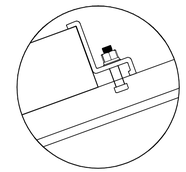

Detail D - End Clamp to XRS Rail
6" = 1' -0"

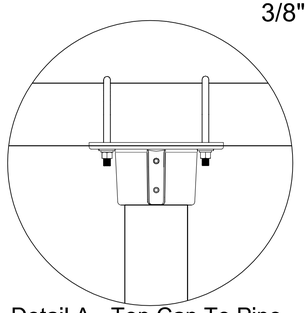

Detail A - Top Cap To Pipe
3" = 1' -0"

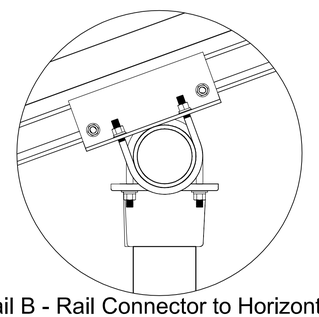

Detail B - Rail Connector to Horizontal Member
3" = 1' -0"

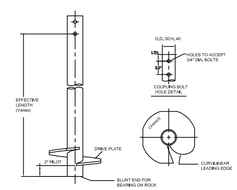

Detail E - Helical Pile (Varies by Supplier)
Not to Scale

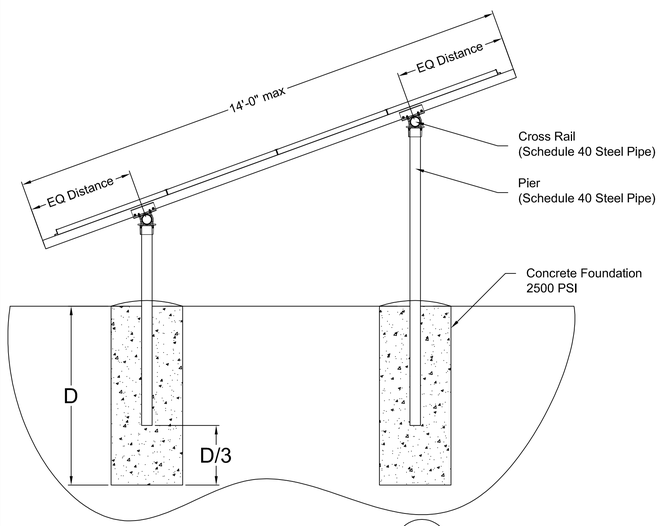

Drill and Pour Foundation 2 / 1.2.0
1/2" = 1' -0"

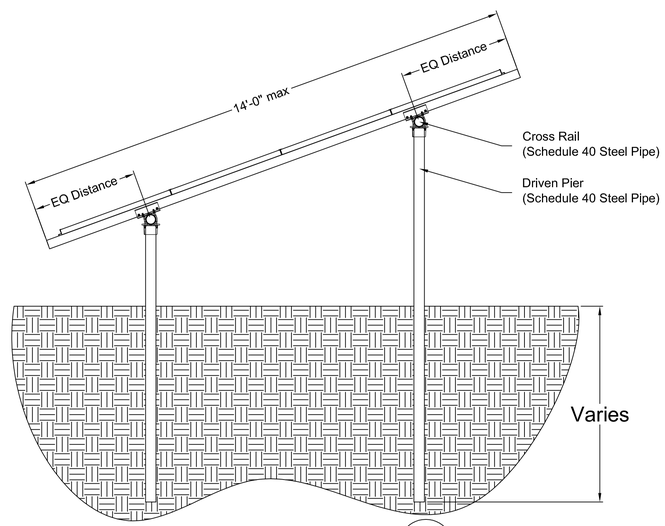

Driven Pier Foundation 2 / 1.2.0
1/2" = 1' -0"

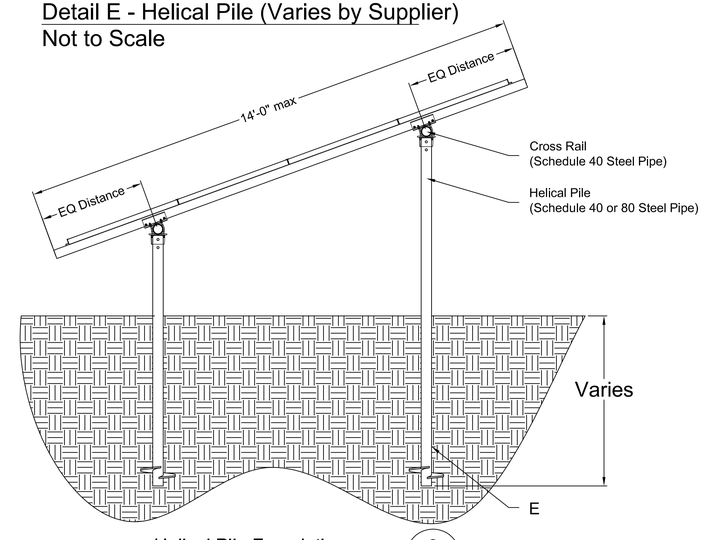

Helical Pile Foundation 2 / 1.2.0
1/2" = 1' -0"

www.ironridge.com | Solar Mounting Made Simple™

IRONRIDGE
Solar Mounting Made Simple™

Willits Headquarters
1435 Baechtel Road
Willits, CA 95490

Hayward Office
26120 Eden Landing Road Suite #2
Hayward, CA 94545

DESIGN CRITERIA & MATERIAL SPECIFICATION

PER ASCE 7-05/WIND LOADING
MAXIMUM PANEL WEIGHT IS 3 psf
XRS RAIL, ALUMINUM ALLOY 6105-T5/6005A-T6
PANEL HARDWARE 18-8 304SS or EQUIVALENT
PIPE A53 GR B, (SCHEDULE-40) or EQUIVALENT
(GALVANIZED)

Notes:

1. Schedule 40 Pipe Locally Sourced
2. Helical Piles by Others

No.	Description	Date

Product Catagory:
Ground Mounting System

Product:
Ground Mounting System

Drawing Name:
Typical Assembly Details

Date	2 March, 2012
Drawn by	EP
Checked by	XX

IR - 1.04

Scale As Noted

2 March, 2012